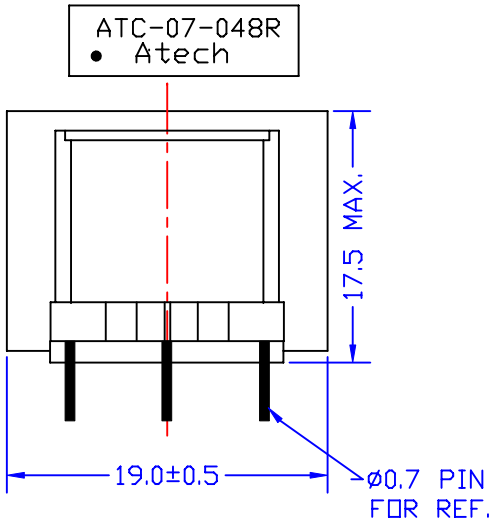

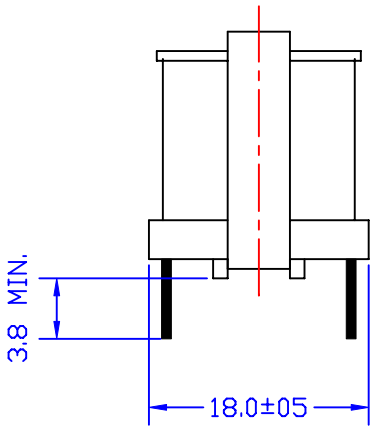

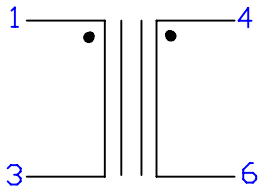

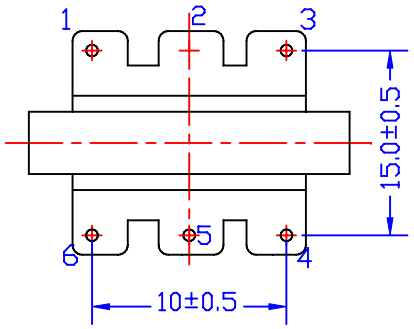

ELECTRICAL CHARACTERISTICS:

1 D.C.R. : PIN 1-3 = 16 OHM MAX. PIN 4-6 = 26.5m OHM MAX.
2 INDUCTANCE : (@1KHZ, 1Vrms) PIN 1-3 = 145mH MIN.
3. TURN RATIO(@1KHZ,1Vrms) : 1-3 : 4-6 = 30+/-2%
4. HI-POT(@1500VAC, 1mA 2SEC): 1-6
5. RoHS COMPLIANT

NO.	DESCRIPTION	DATE	BY	CHK	APPD
	RELEASE	01/07/2008	PAIR		SUEDY

REVISIONS

Atech®
Atech Technology Co., Ltd.
TEL:(02)2794-6667 FAX:(02)2794-8004

TITLE: TRANSFORMER
DWG. NO.: ATC-07-048R
UNITS: M/M
SAFETY
SHEET 1 OF 1
DATE: 01/07/2008
P/N: CTW219004A
DRAW: Pair