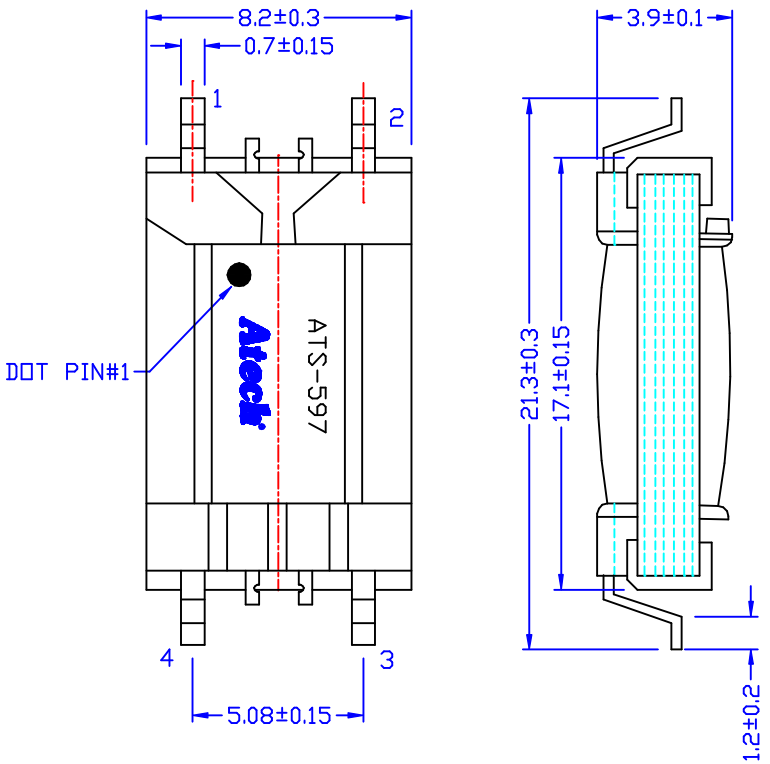

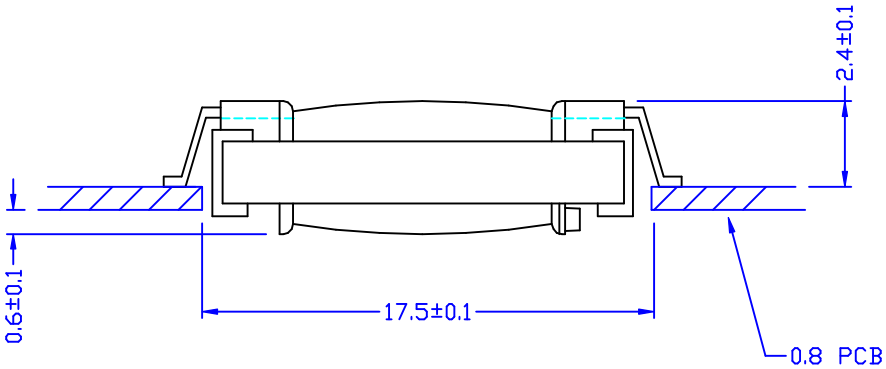

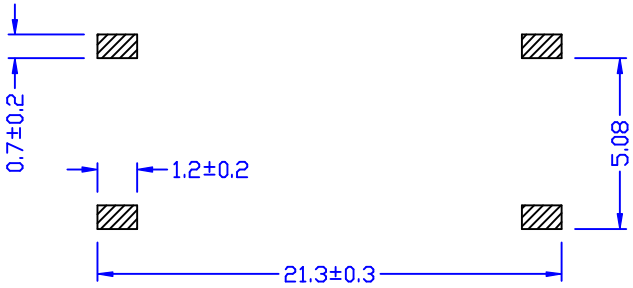

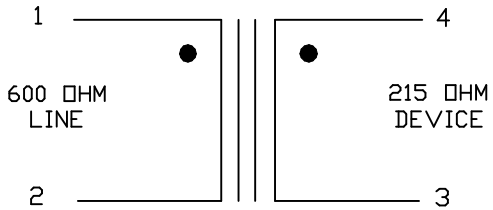

ELECTRICAL CHARACTERISTICS :

1. DCR : PIN 1-2 = 208 OHM ± 12%
   PIN 3-4 = 198 OHM ± 12%
2. INDUCTANCE (@1KHZ, 1Vrms) : PIN 1-2 = 1.73H ± 30%
3. INSERTION LOSS (@1KHZ, 0dBm, 3-4 W/H 215 OHM) :
   PIN 1-2 = 4.71dB ± 0.5
4. FREQ. RESP. (@200HZ) = ± 0.2dB
   (@4KHZ) = ± 0.2dB
5. RETURN LOSS (@10dBm, 3-4 W/H 215 OHM) : @200HZ = 23dB +17/-0
   @1KHZ = 23dB +17/-0
   @4KHZ = 23dB +17/-0
6. TURN RATIO (@26KHZ, 1Vrms) : PIN 1-2 : PIN 4-3 = 1 ± 1%
7. HI-POT (@1650VAC, 1mA, 2SEC) : PRI-SEC

NO:	DESCRIPTION	DATE	BY	CHK	APPD
D	ELECTRICAL CHARACTERISTICS	12/18/2002	DOLLY	KEVIN	SUEDY
C	BOBBIN PIN 圖	11/28/2002	DOLLY	KEVIN	SUEDY
B	ELECTRICAL CHARACTERISTICS	07/03/2002	DOLLY	JEFF	SUEDY
	RELEASE	03/08/2002	DOLLY	JEFF	SUEDY

REVISIONS

Atech®
Atech Technology Co., Ltd.
TEL:(02)2794-6667 FAX:(02)2794-8004

TITLE: 600 : 215 TRANSFORMER
DWG. NO.: ATS-597
UNITS: M/M
SAFETY
DATE: 03/08/02
SHEET 1 OF 1
DRAW: Pair