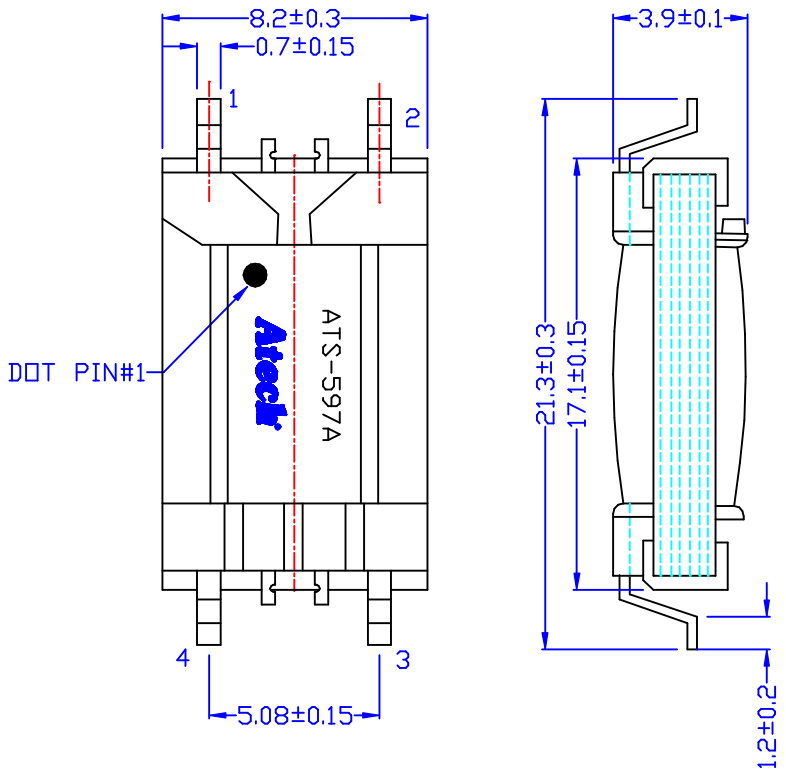

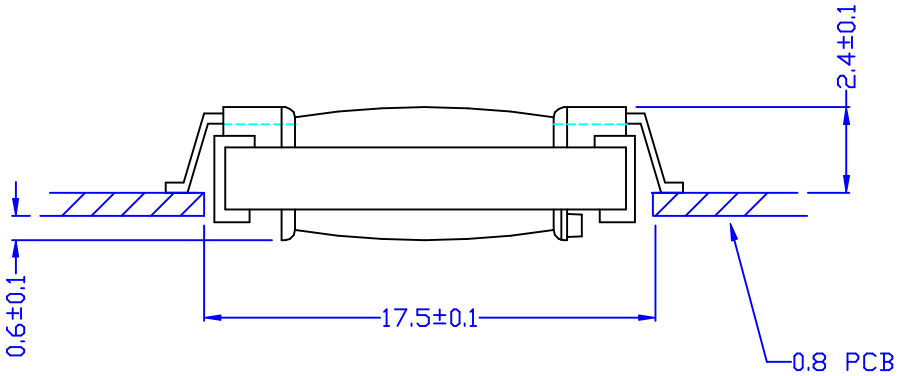

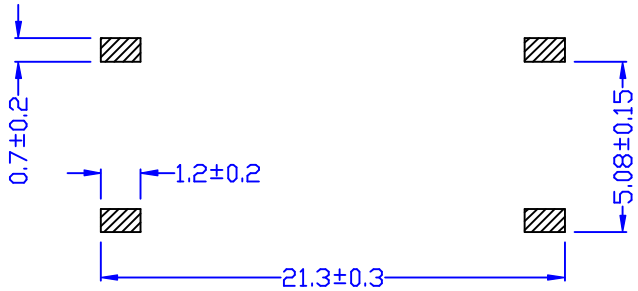

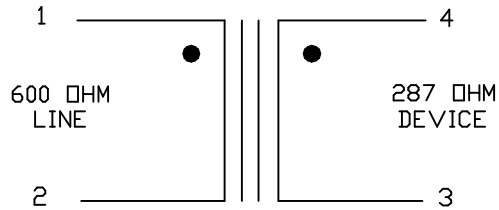

ELECTRICAL CHARACTERISTICS :

1. DCR : PIN 1-2 = 176 OHM ± 12%
   PIN 3-4 = 153 OHM ± 12%
2. INDUCTANCE PARALLEL (@1KHZ, 1Vrms) : PIN 1-2 = 3H ± 30%
3. INSERTION LOSS (@1KHZ, 0dBm, 3-4 W/H 287 OHM) : PIN 1-2 = 3.4dB ± 0.5
4. FREQ. RESP. (@200HZ) = ± 0.2dB
   (@4KHZ) = ± 0.2dB
5. RETURN LOSS (@10dBm, 3-4 W/H 287 OHM) : @200HZ = 23dB +17/-0
   @1KHZ = 23dB +17/-0
   @4KHZ = 23dB +17/-0
6. TURN RATIO (@36KHZ, 1Vrms) : PIN 1-2 : PIN 4-3 = 1 ± 1%
7. HI-POT (@1650VAC, 1mA, 2SEC) : PRI-SEC

NO.	DESCRIPTION	DATE	BY	CHK	APPD
A	外觀	11/27/2002	DOLLY	KEVIN	SUEDY
	RELEASE	07/15/2002	DOLLY	JEFF	SUEDY

REVISIONS

Atech®
Atech Technology Co., Ltd.
TEL:(02)2794-6667 FAX:(02)2794-8004

TITLE: 600 : 287 TRANSFORMER
DWG. NO.: ATS-597A
UNITS: M/M
DATE: 07/15/02
SAFETY
SHEET 1 OF 1
DRAW: Pair