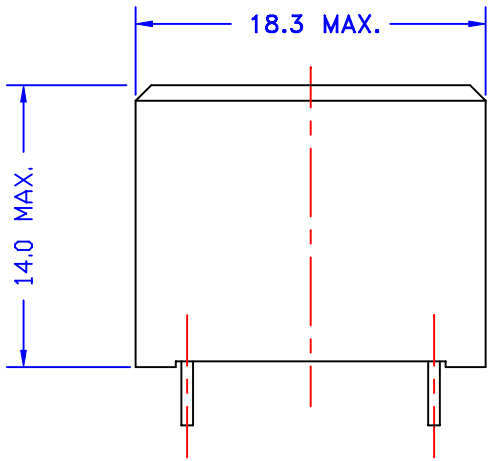

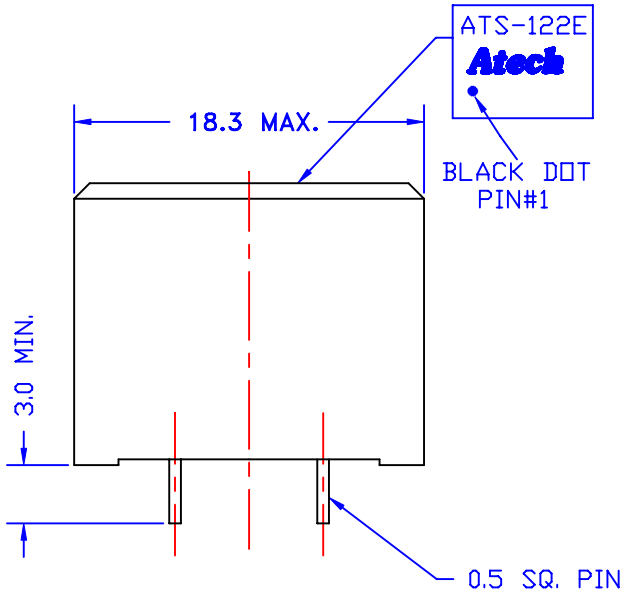

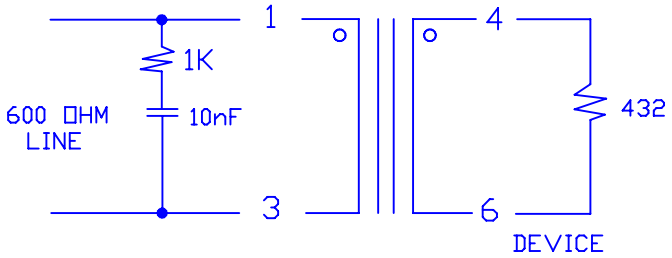

OPTIMUM CLASS (B) 600 OHM MATCH

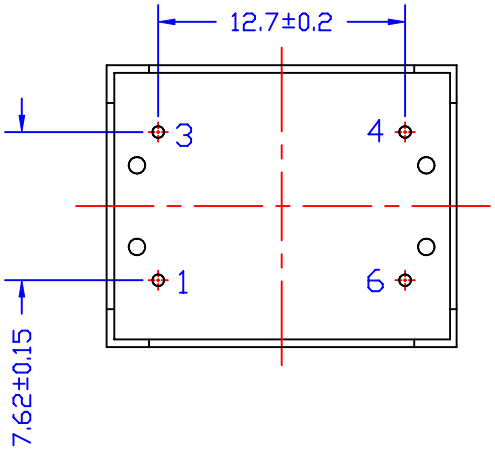

ELECTRICAL CHARACTERISTICS: (TRUE V.34 3750V)

1. D.C.R. : PIN 1-3 = 80 OHM+/-10% PIN 6-4 = 106 OHM+/-10%
2. INDUCTANCE(@1KHZ,0.1Vrms) PIN 1-3 = 3.5H MIN.
   (@ 50HZ, 0.1Vrms) PIN 1-3 = 19H MIN.(PARALLEL)
3. LEAKAGE INDUCTANCE(@1KHZ,0.1Vrms) : PIN 1-3 = 10mH MAX.
4. RETURN LOSS : (REF. 600 OHM) 200 TO 4KHZ = 32dB MIN.
   @ 1KHZ = 40dB TYP.
5. INSERTION LOSS : (@1KHZ,1Vrms) 1.55dB MAX.
6. FREQ. RESPONSE: (REF. 1KHZ) 200 TO 4KHZ = +/-0.1dB
7. LONGITUDINAL BALANCE : 200HZ-4KHZ 70dB MIN.
8. TURN RATIO : (@6KHZ, 0.1Vrms) PIN 1-3 : 4-6 = 1+/-1%
9. DISTORTION : 300HZ, -10dBm : -82dB MAX.
10. HI-POT : (3750 VAC, 1mA, 1MIN.) PIN 1-6
11. WAVE SOLDERING TEMPERATURE : 245+/-10 DEG.C

NO.	DESCRIPTION	DATE	BY	CHK	APPD
E	DELETE BABT NO.	10/03/2006	PAIR		EUGENE
D	ADD BABT NO.	06/30/99	PAIR		SUEDY
C	DELETE ø0.6 PIN	12/18/98	PAIR		SUEDY
	RELEASE	06/23/98	PAIR		SUEDY

REVISIONS

Atech®
Atech Technology Co., Ltd.
TEL:(02)2794-6667 FAX:(02)2794-8004

TITLE 600 : 432 TRANSFORMER

DWG. NO. ATS-122E

UNITS: M/M

SAFETY

SHEET 1 OF 1

DATE 06/23/98

DRAW Pair