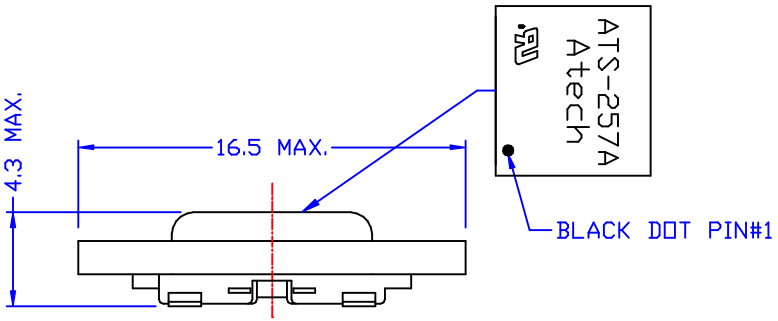

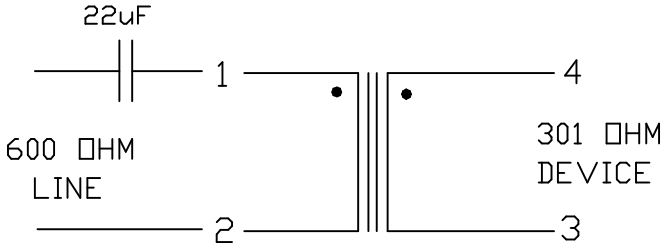

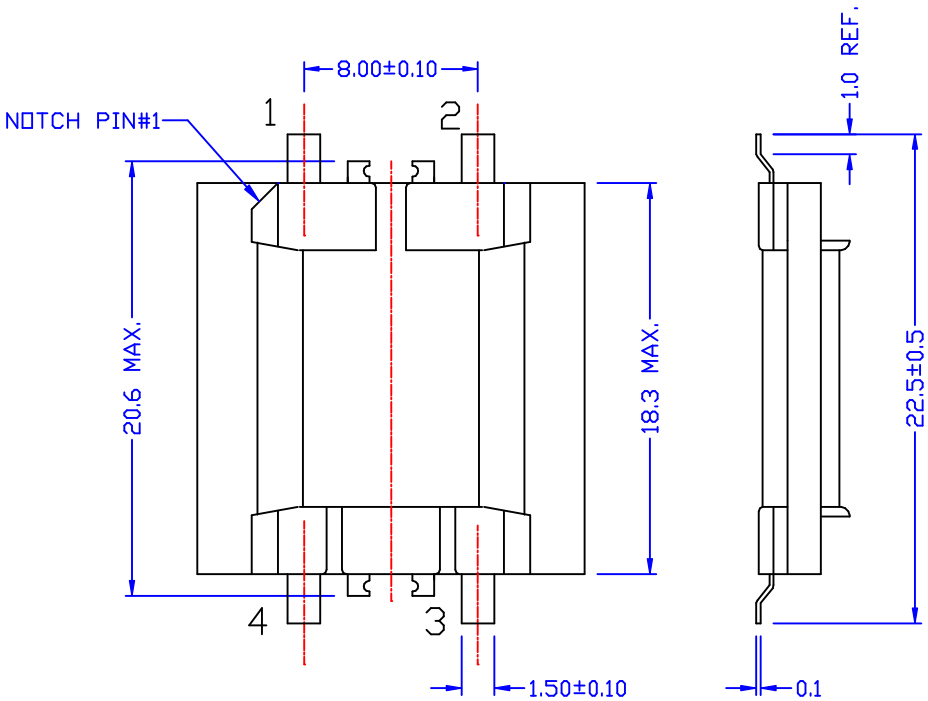

ELECTRICAL CHARACTERISTICS : (TRUE 56K SMD)

1. D.C.R. : PIN 1-2 = 150 OHM ± 10%
   PIN 3-4 = 150 OHM ± 10%
2. INDUCTANCE (@250HZ, 1Vrms, PARALLEL) : PIN 1-2 = 5.5H MIN.
3. IMPEDANCE (@1KHZ, 0dBm 3-4 W/H 301OHM) : PIN 1-2 = 600 OHM ± 3%
4. INSERTION LOSS = 3 ± 0.2dB (AT 1KHZ, 0dBm, W/H 301 OHM LOAD)
5. FREQ. RESP. (REF. TO 1KHZ) : @200HZ-10KHZ = ± 0.1dB
   @70HZ-20KHZ = ± 0.2dB
6. RETURN LOSS (REF. 600 OHM) : @200HZ-4KHZ = 30dB MIN.
   @70HZ-10KHZ = 25dB MIN.
7. TURN RATIO = 1 : 1 ± 1%
8. POLARITY = PIN 1-4 INPHASE
9. LONGITUDINAL BAL. = 65dB MIN. AT 200HZ TO 4KHZ
10. T.H.D. (@600HZ, -10dBm) = -86dB MAX.
    (@150HZ, -3dBm) = -71dB MAX.
11. HI-POT (@1250VAC, 1mA, 2SEC) : PRI.-SEC.

NO.	DESCRIPTION	DATE	BY	CHK	APPD
C	TURN RATIO	12/09/2002	DOLLY	AL	SUEDY
B	IR REFLOW, COLOR BROWN				
A	L, THD				
	RELEASE				

REVISIONS

Atech®
Atech Technology Co., Ltd.
TEL:(02)2794-6667 FAX:(02)2794-8804

TITLE: 600 : 301 TRANSFORMER
DWG. NO.: ATS-257A
UNITS: M/M
DATE: 03/10/97
SAFETY: E159603
SHEET 1 OF 1
DRAW: Pair