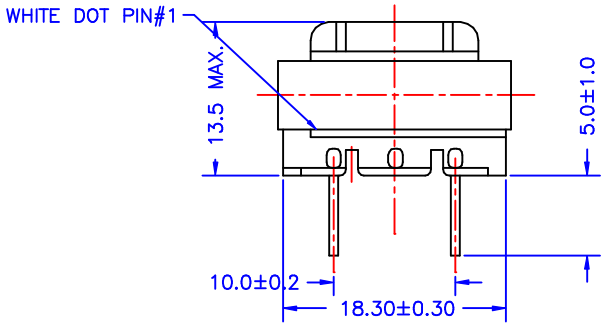

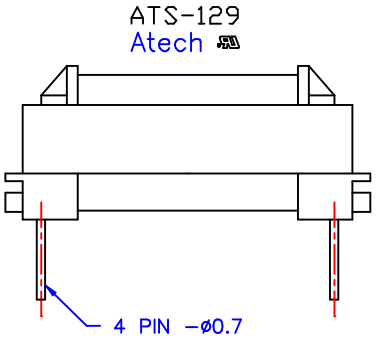

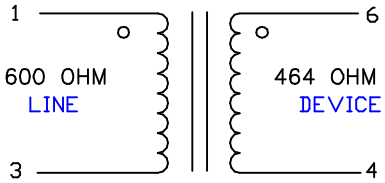

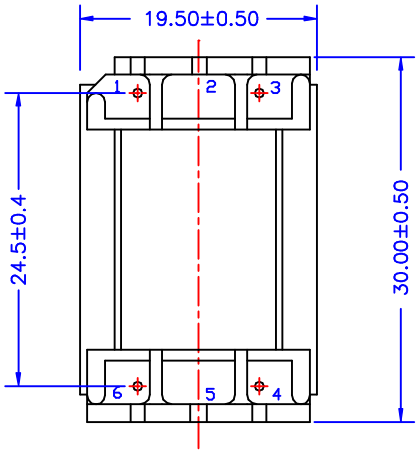

ELECTRICAL CHARACTERISTICS: (671-8273 COMPATIBLE)

1 D.C.R. : PIN 1-3 = 80 OHM +/- 15%
PIN 4-6 = 100 OHM +/- 15%
2 INDUCTANCE : (AT 300HZ, 1Vrms) PIN 1-3 = 370mH MIN.(W/H 70mADC)
3 IMPEDANCE = 600 OHM +/-2%(AT 4KHZ, 1Vrms, W/H 70mADC, PIN 4-6 W/H 464 OHM)
4 INSERTION LOSS = 1.9dB MAX.(AT 1KHZ, 1Vrms)
5 FREQ. RESP. (REF. TO 1KHZ)@300HZ=+/-1dB,@4KHZ=+/-0.2dB
6 RETURN LOSS : (REF. 600 OHM) @300HZ = 8dB MIN.
@1KHZ = 15dB MIN.
@4KHZ = 15dB MIN.
7 LOGITUDINAL BALANCE = 70dB MIN.(AT 1KHZ)
LOGITUDINAL BALANCE = 60dB MIN. (AT 4KHZ)
8 THD :(@300HZ, -10dBm,70mADC) = -76dB MAX.
9 HI-POT = 1500VAC, 1mA, 2SEC (PRI-SEC)

NO.	DESCRIPTION	DATE	BY	CHK	APPD
A	24.5 ± 0.4	04/11/2003	RORY	PAIR	SUEDY
	RELEASE		PAIR		SUEDY

REVISIONS

Atech®
Atech Technology Co., Ltd.
TEL:(02)2794-6667 FAX:(02)2794-8004

TITLE 600 : 464 TRANSFORMER
DWG. NO. ATS-129
UNITS: M/M
DATE
SAFETY
E159603
SHEET 1 OF 1
DRAW Pair