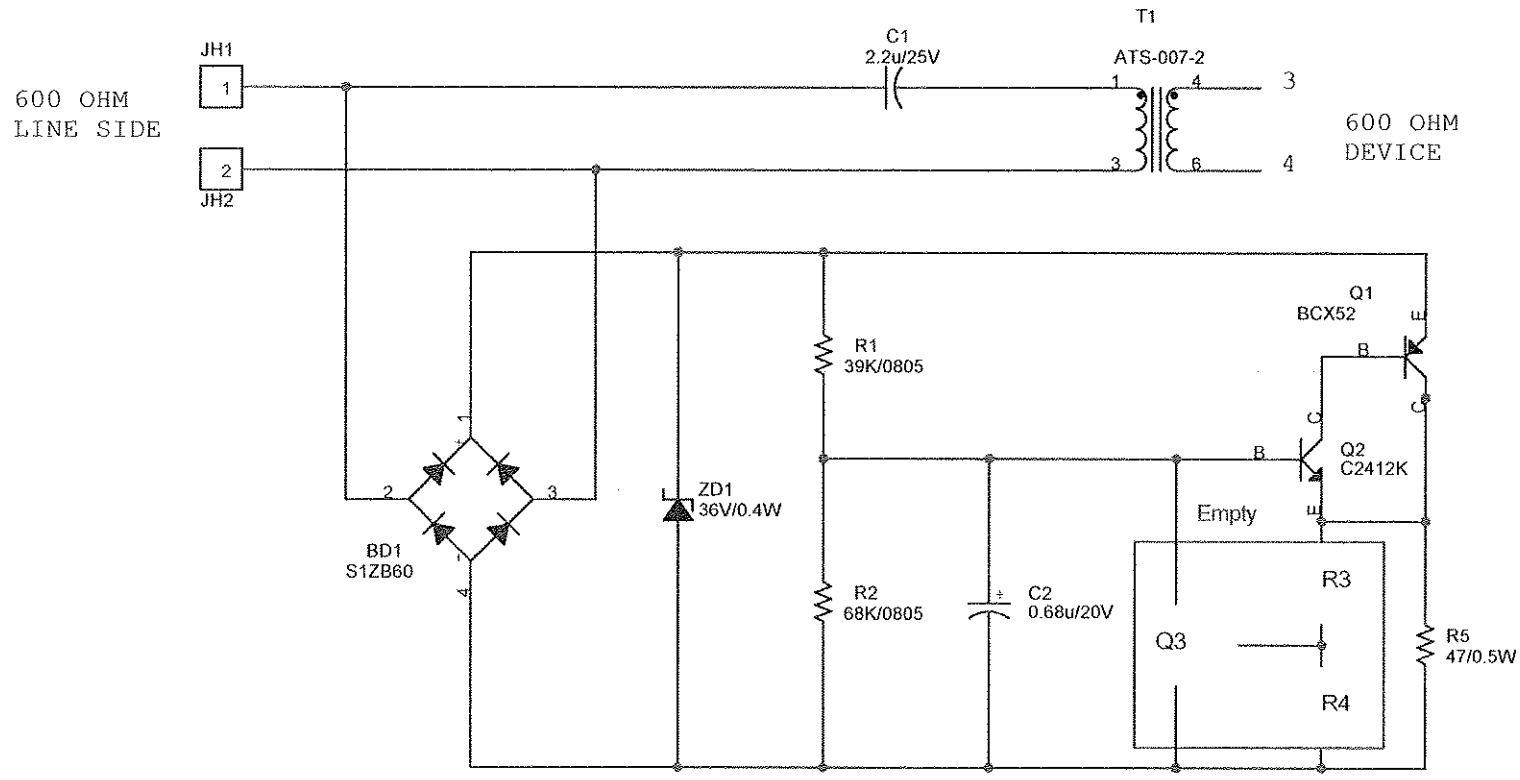

Atech Technolgy Co., Ltd.		
Title: 600:600 COUPLING MODULE, 3750V		
Size: A	Document Number: ATM-002-1	Rev: A
Date: Monday, March 17, 2008	Sheet 1 of 1	