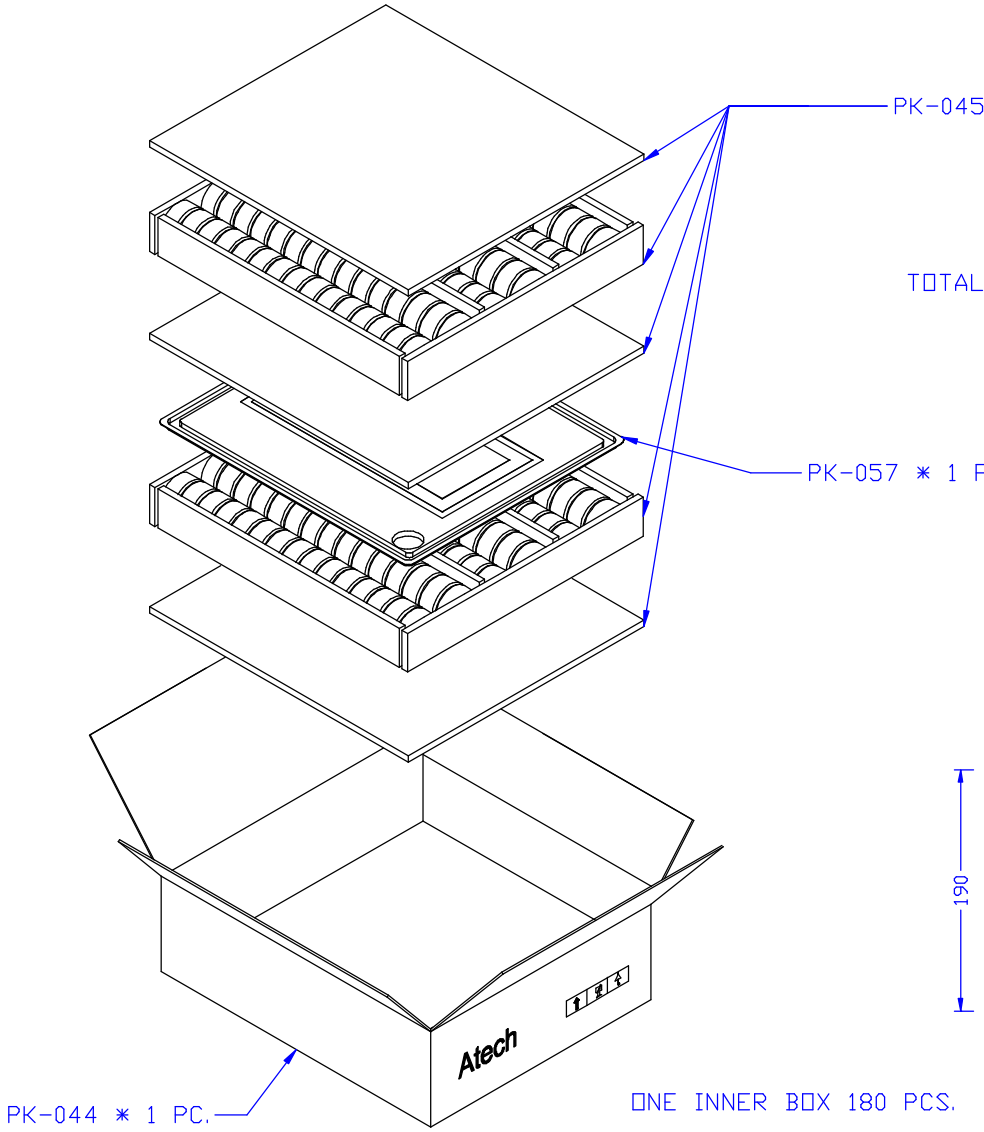

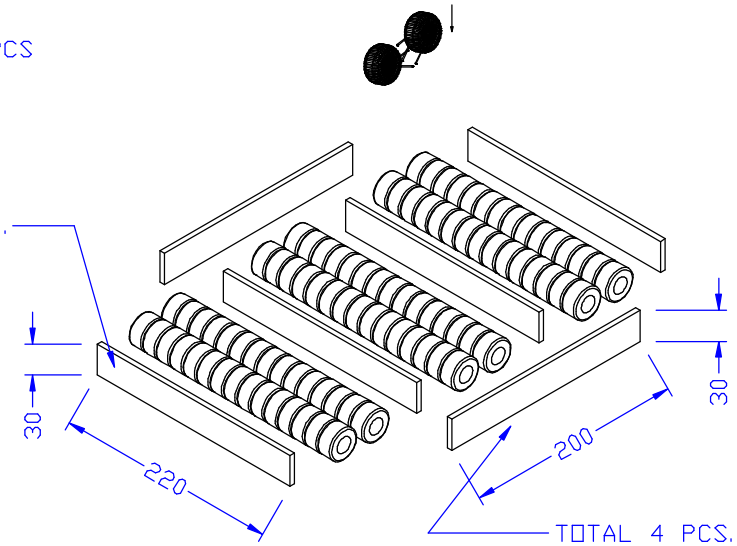

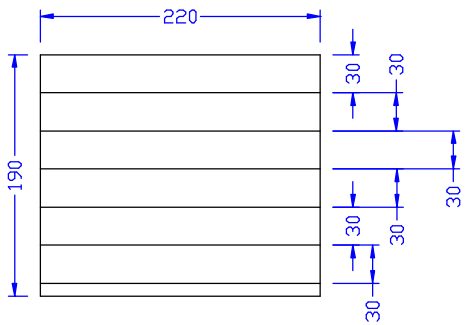

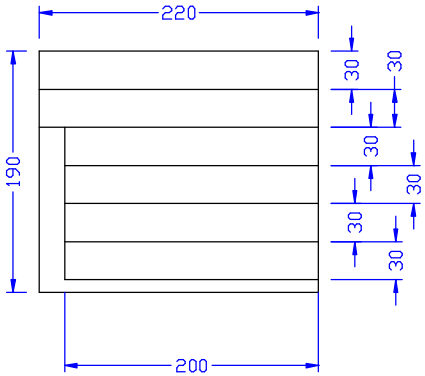

ONE INNER BOX 180 PCS.

ONE LAYER 90 PCS
ONE INNER BOX 2 LAYERS
ONE CARTON 6 BOXES

NO.	DESCRIPTION	DATE	BY	CHK	APPD
A	REDRAW	03/10/2004	BART	AL	SUEDY
	RELEASE	01/30/2004	BART	PAIR	SUEDY

REVISIONS

Atech®
Atech Technology Co., Ltd.
TEL:(02)2794-6667 FAX:(02)2794-8004

TITLE ATC-03-056 PACKING
DWG. NO. ATCP-03-056
UNITS: M/M
SAFETY
SHEET 1 OF 1
DATE 01/30/04
DRAW Pair