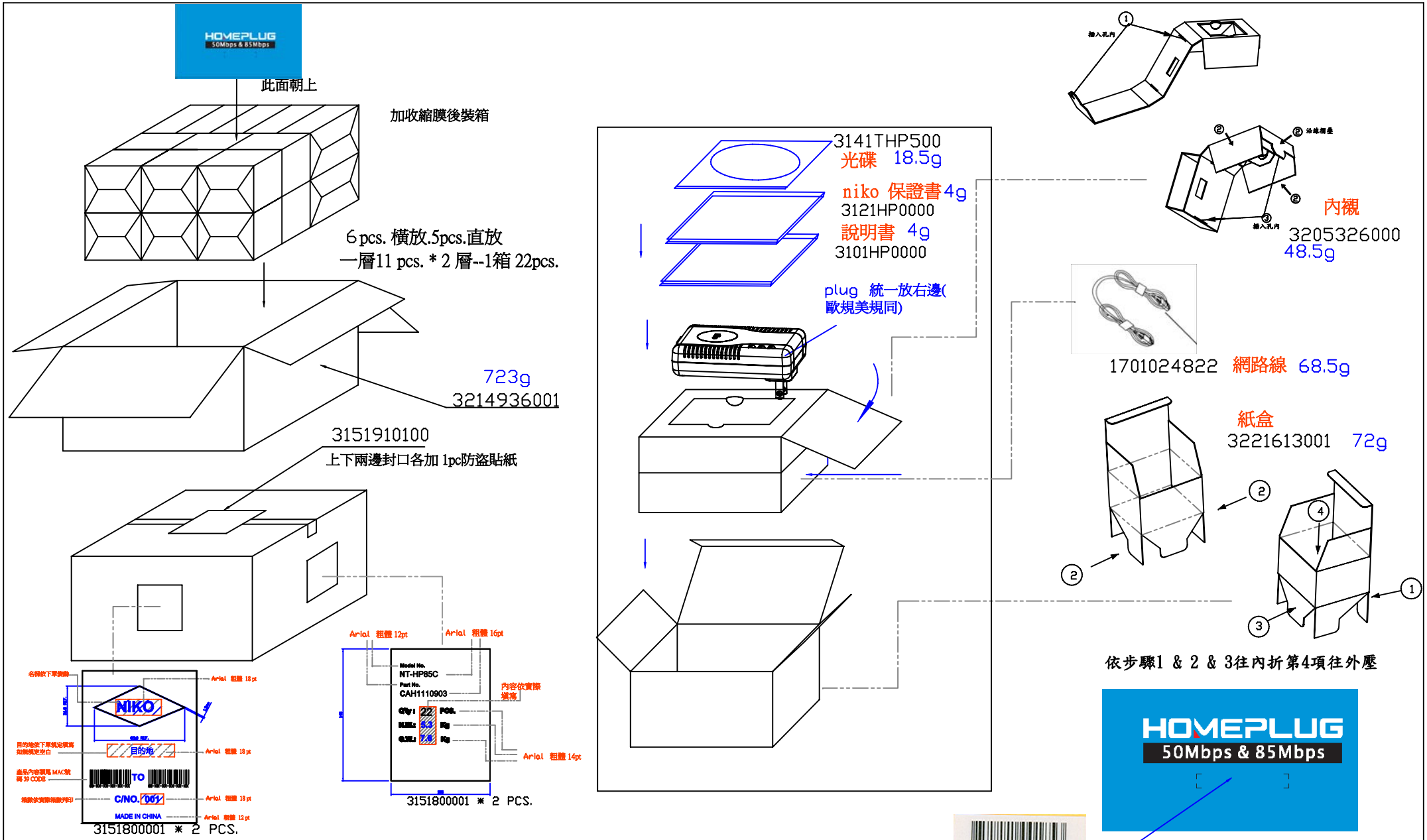

數 量	重 量	料 號	說 明
1		3205326000	緩衝紙襯 530x267mm for ATHP 50/85M ATECH/萬洋
1		1701024822	Cable Harness PVC 24AWG CAT-5 RJ45 8P8C 30u 2M 灰色/君威
1		3221613001	BOX,160*130*90 FOR 50&85M NIKO 四色印刷,灰銅300P/萬洋
1		3151623101	UPC BARCODE LABEL 23*10mm 銅版紙,85M/奇毅
1		3141THP500	CD Driver for ATHP 50/85M 彩色印刷 w/白色紙袋/揚明
1		3101HP0000	Quick Start Guide for ATHP-008R A4 Size 80P 黑色印刷/萬洋
1/22		3214936001	CARTON ,L48.8*W35.5*H27.7 FOR HOMEPLUG 單包裝 /萬揚
2/22		3151910100	LABEL.L100*100mm.銅版紙.防盜貼紙.奇毅
4/22		3151800001	Label 銅版紙 空白無印刷 for 正側麥使用 105x145mm/精成
1		3121HP0000	Warranty Registration for niko A4 size 120P模造 黑色印刷/萬洋

NO.	DESCRIPTION	DATE	BY	CHK	APPD
C	ADD MAC. NO. BARCODE	10/03/2006	PAIR		EUGENE
B	側麥 MODEL NO. NT-HP85C	09/22/2006	PAIR		EUGENE
A	正側麥頭改爲兩邊	09/08/2006	PAIR		EUGENE
	RELEASE	09/14/2006	PAIR		EUEGEN

REVISIONS

Atech®
Atech Technology Co., Ltd.
TEL:(02)2794-6667 FAX:(02)2794-8004

TITLE: PACKING ASS'Y
DWG. NO. 968HP00804
UNITS: M/M
SAFETY
SHEET 1 OF 1
DATE 09/14/06
P/N:
DRAW Pair