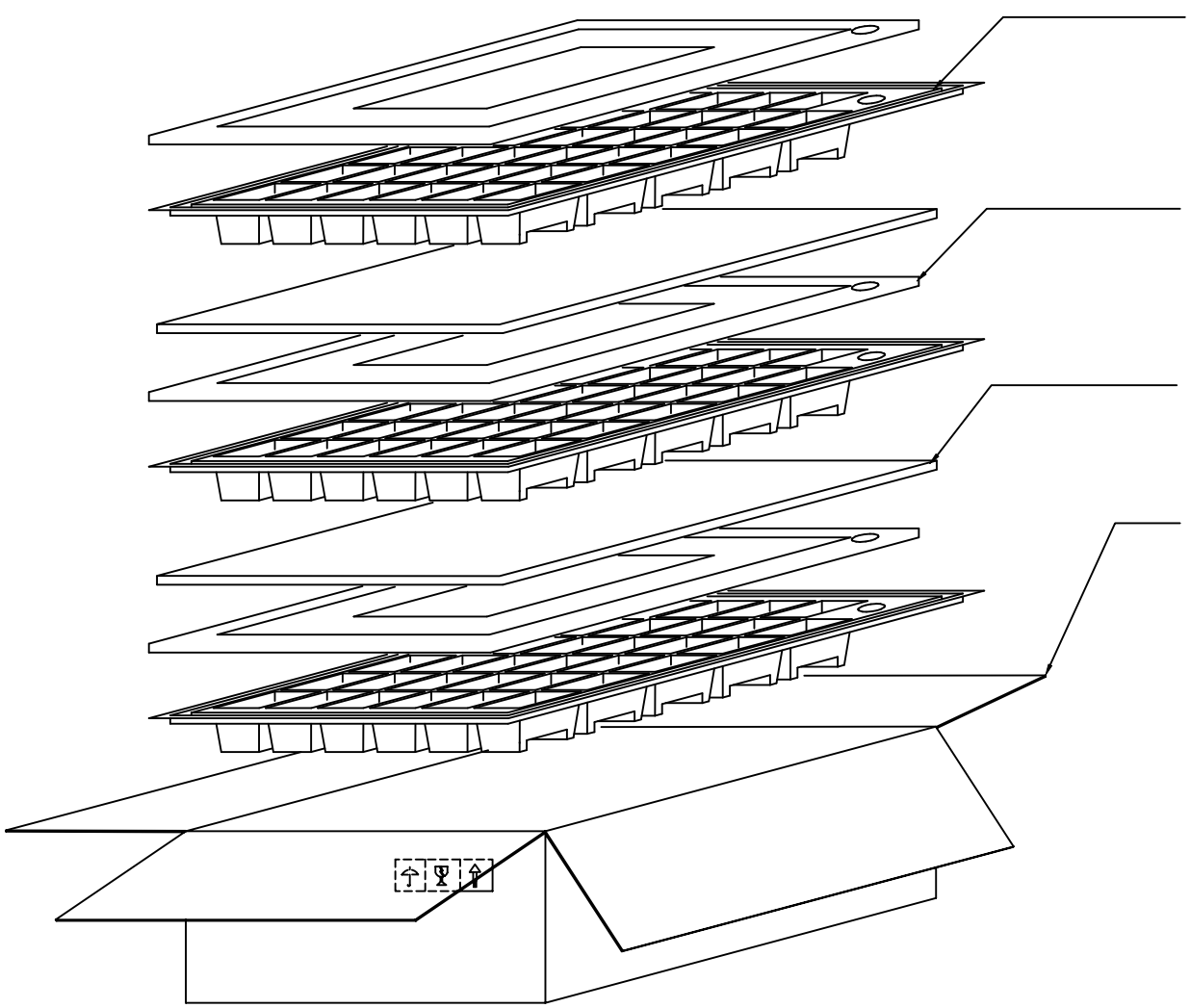

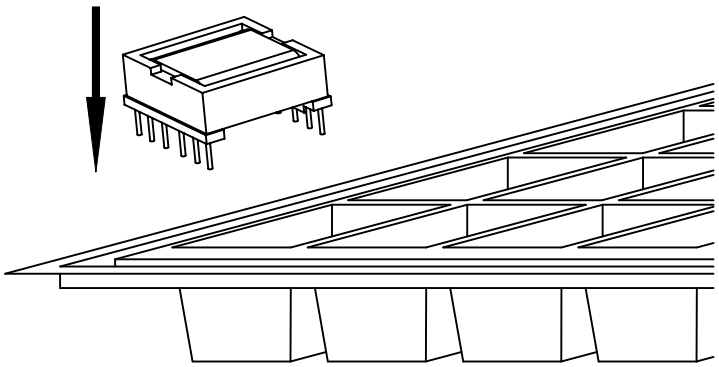

1 CARTON:105 PCS.

ONE TRAY 35 PCS.
ONE INNER BOX 105 PCS.
ONE CARTON 6 INNER BOX 630 PCS.

NO.	DESCRIPTION	DATE	BY	CHK	APPD
	RELEASE	2008/08/20	Ming		

REVISIONS

Atech®
Atech Technology Co., Ltd.
TEL:(02)2794-6667 FAX:(02)2794-8004

TITLE PACKING ASS'Y
PACKING

DWG. NO. 968PT12501

UNITS: M/M

SAFETY

SHEET 1 OF 1

DATE 20080820

DRAW Ming