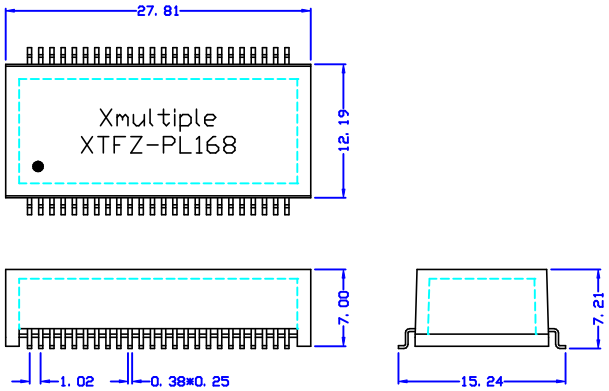

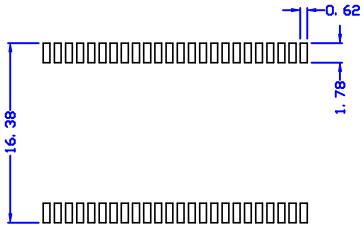

UNLESS OTHERWISE SPECIFIED ALL TOLERANCES ARE ± 0.25

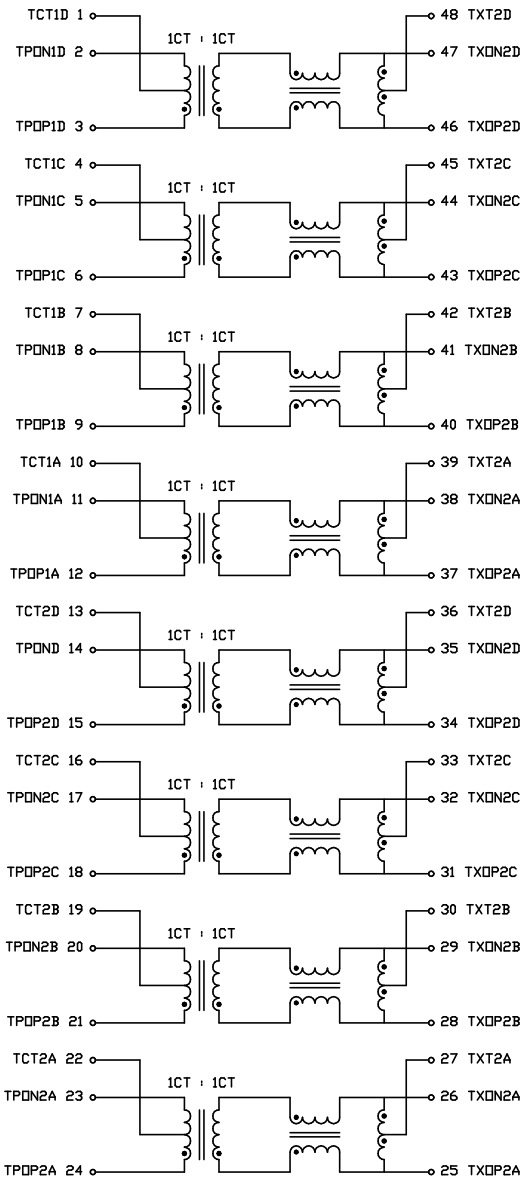

ELECTRICAL CHARACTERISTICS :

1. TURN RATIO : PIN 2-1-3 : 47-48-46 1CT : 1CT ± 2%
   PIN 5-4-6 : 44-45-43 1CT : 1CT ± 2%
   PIN 8-7-9 : 41-42-40 1CT : 1CT ± 2%
   PIN 11-10-12 : 38-39-37 1CT : 1CT ± 2%
   PIN 14-13-15 : 35-36-34 1CT : 1CT ± 2%
   PIN 17-16-18 : 32-33-31 1CT : 1CT ± 2%
   PIN 20-19-21 : 29-30-28 1CT : 1CT ± 2%
   PIN 23-22-24 : 26-27-25 1CT : 1CT ± 2%
2. OCL : PIN 47-46, 44-43, 41-40, 38-37
   PIN 35-34, 32-31, 29-28, 26-25
   350uH MIN. AT 100KHZ, 100mV WITH 8mA DC BIAS @ 0 TO 70°C
3. INSERTION LOSS : PIN 2-3 TO 47-46, 5-6 TO 44-43 : 1.1dB MAX. @0.1 TO 1MHZ
   PIN 8-9 TO 41-40, 11-12 TO 38-37 : 0.5dB MAX. @1 TO 65MHZ
   PIN 14-15 TO 35-34, 17-18 TO 32-31 : 0.8dB MAX. @65 TO 100MHZ
   PIN 20-21 TO 29-28, 23-24 TO 26-25 : 1.2dB MAX. @100 TO 125MHZ
4. RETURN LOSS : PIN 47-46 TO 2-3, 44-43 TO 5-6
   PIN 41-40 TO 8-9, 38-37 TO 11-12
   PIN 35-34 TO 14-15, 32-31 TO 17-18
   PIN 29-28 TO 20-21, 26-25 TO 23-24
   UNDER 100 OHMS ± 15% ENVIRONMENT
   18dB MIN. @0.5 TO 40MHZ 12-20LOG (f/80MHZ)dB MIN. @40 TO 100MHZ
5. COMMON TO COMMON REJECTION : PIN 2-3 TO 47-46, 5-6 TO 44-43
   PIN 8-9 TO 41-40, 11-12 TO 38-37
   PIN 14-15 TO 35-34, 17-18 TO 32-31
   PIN 20-21 TO 29-28, 23-24 TO 26-25
   30dB MIN. @0.1 TO 100MHZ
6. CROSS TALK : 33+20LOG (f/100MHZ)dB MIN. @0.1 TO 100MHZ
7. HI-POT : 1500Vrms MIN. @60HZ FOR 1MIN.

NO.	DESCRIPTION	DATE	BY	CHK	APPD
	RELEASE	10/11/2004	BART	AL	SUEDY

REVISIONS

Atech®
Atech Technology Co., Ltd.
TEL:(02)2794-6667 FAX:(02)2794-8004

TITLE: DUAL 1000 BASE-T
DWG. NO. XTFZ-PL168
UNITS: M/M
SAFETY
DATE 10/11/04
SHEET 1 OF 1
DRAW Pair