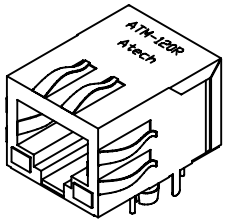

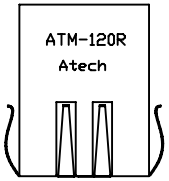

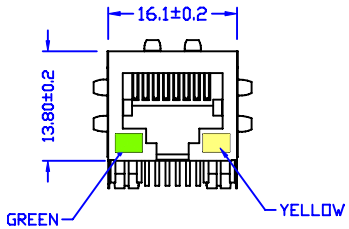

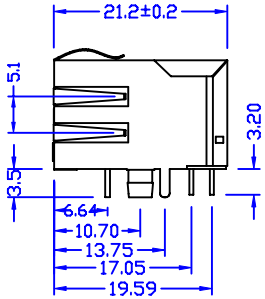

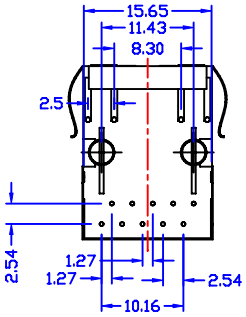

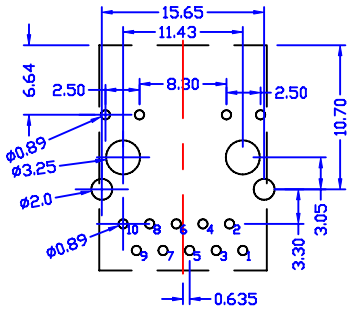

PC BOARD LAYOUT REF.

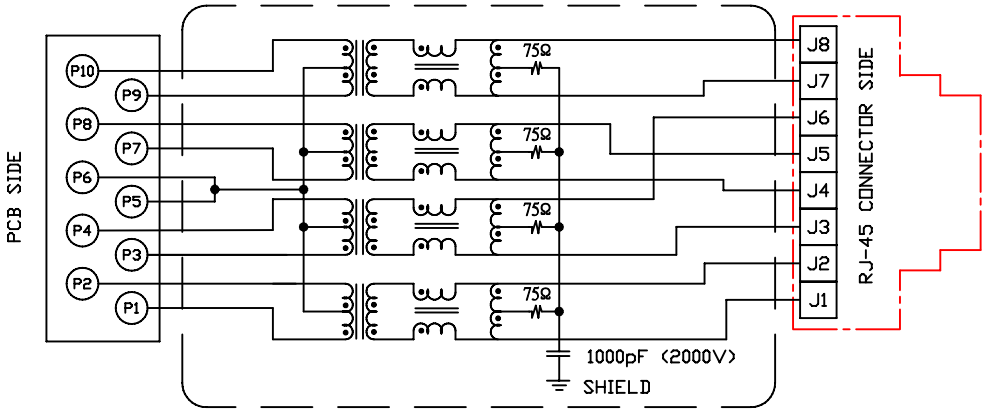

ELECTRICAL CHARACTERISTICS :

1. TURNS RATIO : TX/RX = 1CT : 1CT ±3%.
2. HI-POT : 1500 Vrms.
3. OCL(@100KHZ/0.1Vrms,WITH 8MA DC BIAS) : 350uH MIN.
4. INSERTION LOSS (@0.1-100MHZ) = -1.0 dB MAX.
5. RETURN LOSS : 1~30MHZ = -18dB MIN.
   40MHZ = -14dB MIN.
   50MHZ = -13dB MIN.
   60~80MHZ = -12dB MIN.
   100MHZ = -10dB MIN.
6. RISE TIME(10-90%) : 2.5ns TYP.
7. RoHS COMPLIANT

UNLESS OTHERWISE SPECIFIED ALL TOLERANCES ARE ±0.3

NO.	DESCRIPTION	DATE	BY	CHK	APPD
	RELEASE	05/08/2007	PAIR	WILLIE	EUGENE

REVISIONS

Atech®
Atech Technology Co., Ltd.
TEL(02)2794-6667 FAX(02)2794-8004

TITLE 1000 LAN-MATE
DWG. NO. ATM-120R
UNITS: M/M
SAFETY
SHEET 1 OF 1
DATE 05/08/07
DRAW Pair