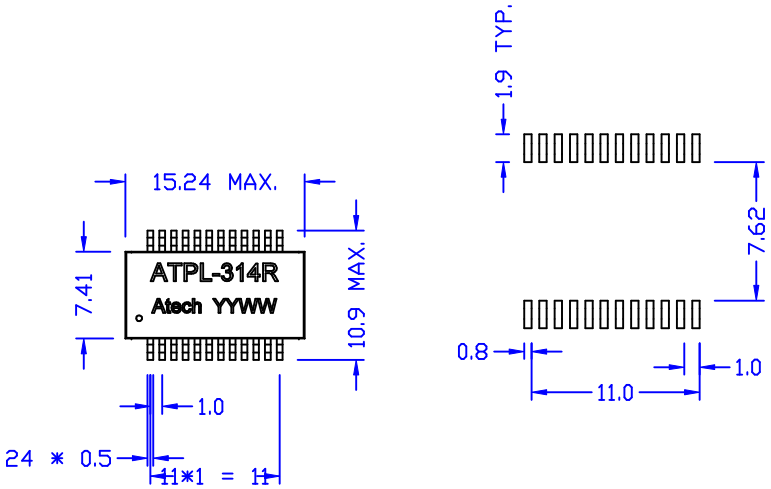

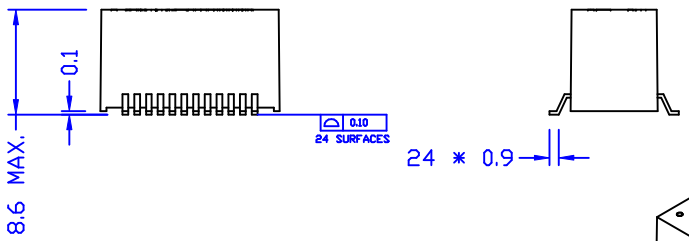

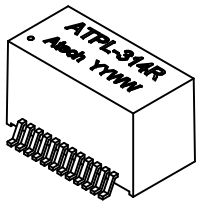

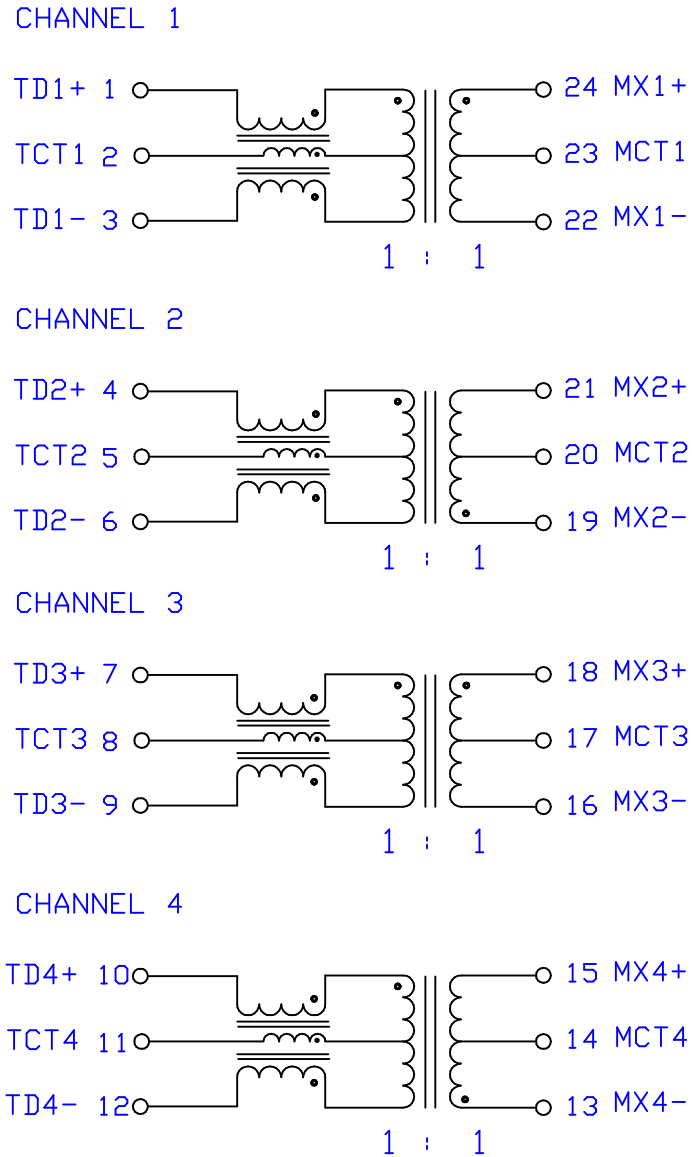

ELECTRICAL CHARACTERISTICS :

1. TURNS RATIO :TX/RX = 1CT : 1CT
2. PRI OCL(@100KHZ/0.1V WITH 8mADC BIAS) :350uH MIN.
3. HI-POT : 1500V
4. CROSS TALK : 1 MHZ - -50dB MIN.
   10-100MHZ = -55dB+22dB*log10(f/10)
5. INSERTION LOSS:100KHZ = -1.2dB MAX.
   1-125MHZ = -0.2dB-00.02dB*f^1.4
6. RETURN LOSS(@100 OHM) : 0.1-40MHZ = -16dB
   40-100MHZ = -10+20dB*log 10(f/80)
7. DCMR : 2MHZ = -50dB MIN.
   30-200MHZ = -43dB+22dB*log 10(f/30)
8. D.C.R :1/2 WINDING = 0.65 OHM MAX.
   CENTER TAP SYMMETRY = ±0.065 OHM MAX.
9. RoHS COMPLIANT

NO.	DESCRIPTION	DATE	BY	CHK	APPD
	RELEASE	07/05/2007	PAIR	AL	EUGENE

REVISIONS

Atech®
Atech Technology Co., Ltd.
TEL:(02)2794-6667 FAX:(02)2794-8004

TITLE 100/1000BASE-T MAGNETIC MODULE
DWG. NO. ATPL-314R
UNITS: M/M
DATE 07/05/07
SAFETY
SHEET 1 OF 1
DRAW Pair