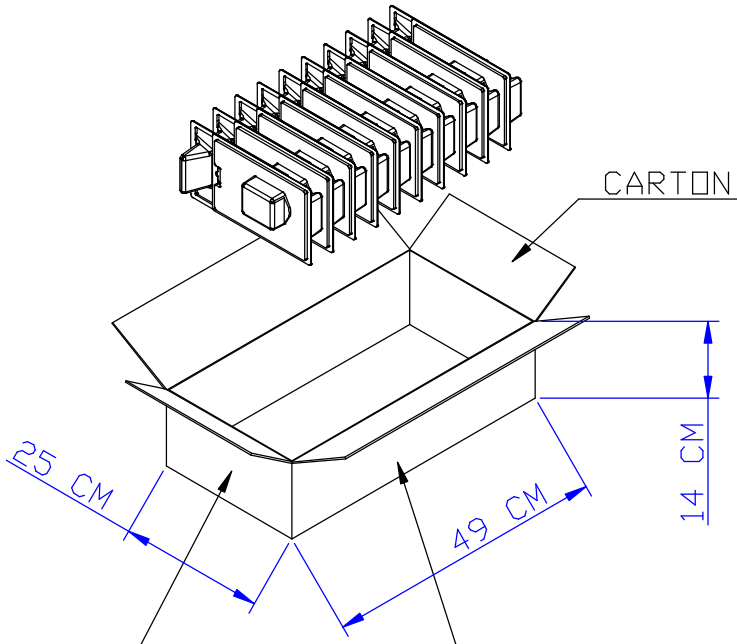

ONE PART:
ATS-036FT * 1
PK-168 * 1
PK-TR200135-001 * 1
PK-TR200135-002 * 1

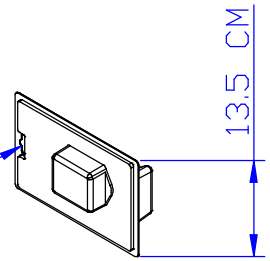

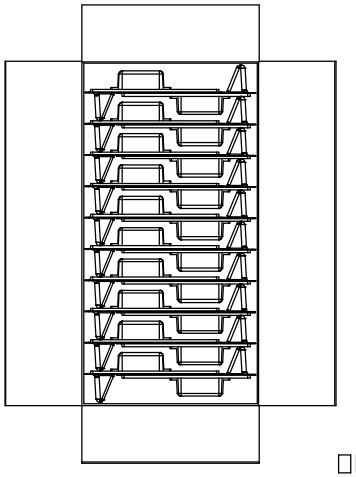

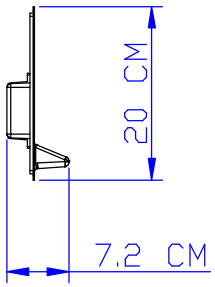

ONE PART : H20*W7.2*L13.5 CM
ONE PART WEIGHT : 0.12 KGS

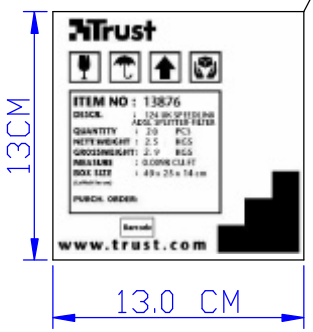

LEFT/RIGHT SIDE

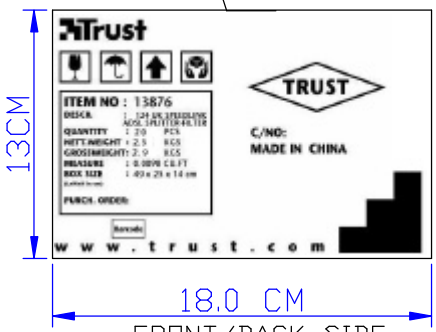

FRONT/BACK SIDE

CARTON SIZE : H14*W25*L49cm
ONE CARTON 20 PCS.
N.W. : 2.5 KGS
G.W. : 2.9 KGS

NO.	DESCRIPTION	DATE	BY	CHK	APPD
A	DIM.	04/16/2004	BART	PAIR	SUEDY
	RELEASE	10/22/2003	PAIR	AL	SUEDY

REVISIONS

Atech®
Atech Technology Co., Ltd.
TEL:(02)2794-6667 FAX:(02)2794-8004

TITLE PACKING ATF036FT
DWG. NO. ATFP036FT
UNITS: MM
SAFETY
SHEET 1 OF 1
DATE 10/22/03
DRAW Pair